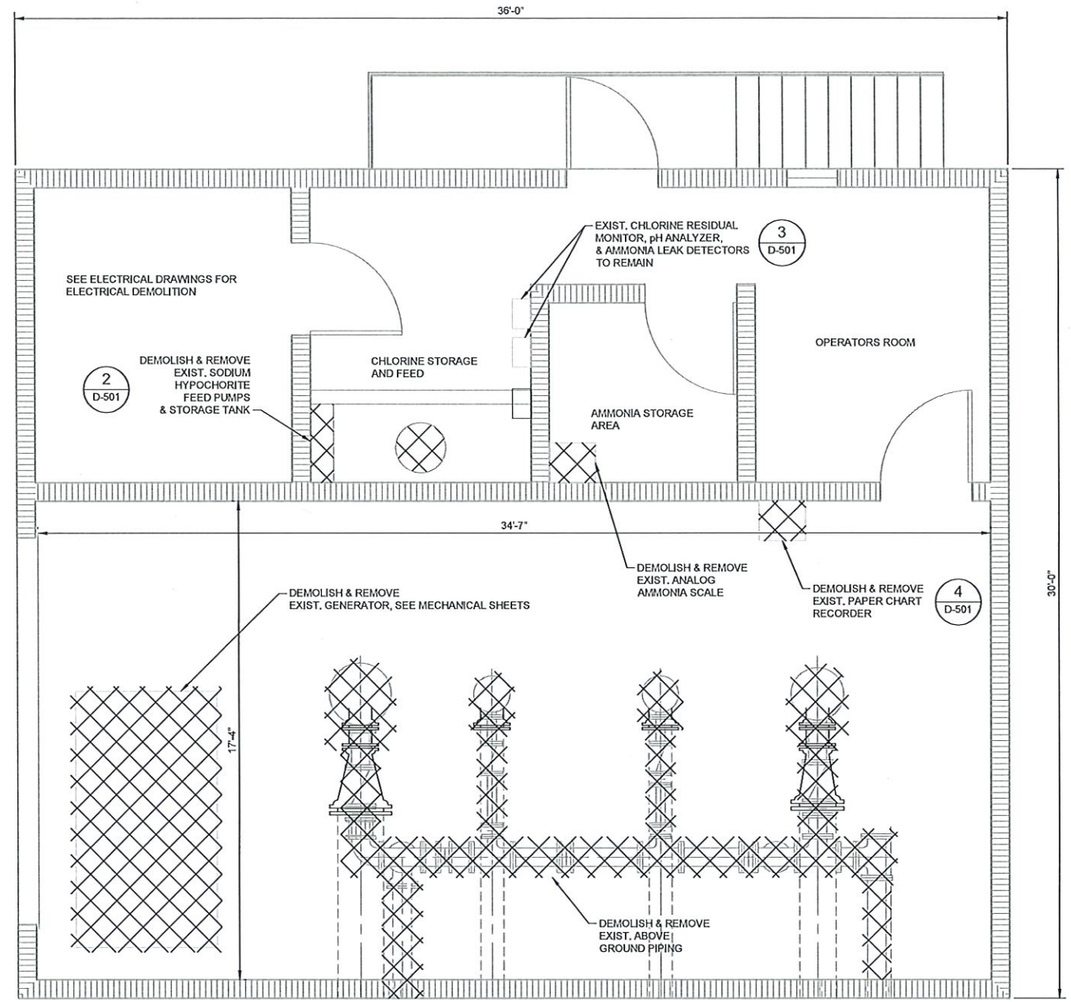

PUMP STATION DEMOLITION PLAN

SCALE: 3/8"=1'-0"

TETRA TECH
www.tetratech.com
10600 CHEVROLET WAY, SUITE 102
ESTERO, FL 33928
PHONE: (239) 390-1457 FAX: (239) 390-1769

Collier County

MARK	DATE	DESCRIPTION	BY

COLLIER COUNTY PUBLIC UTILITIES
GOODLAND PUMP STATION IMPROVEMENTS

PUMP STATION DEMOLITION PLAN

PROJ: 200-08486-22002
DESN:
DRWN:
CHKD:

D-101

Copyright: Tetra Tech

Bar Measures 1 inch, otherwise drawing not to scale

5/21/2025 6:10:05 PM - O:\PROJECTS\ORLANDO\IER\08486200-08486-22002\CAD\SHEETFILES\PS IMPROVEMENTS\D-101 PUMP STATION DEMOLITION PLAN.DWG - CYR, STEVE

1 SITE PHOTO

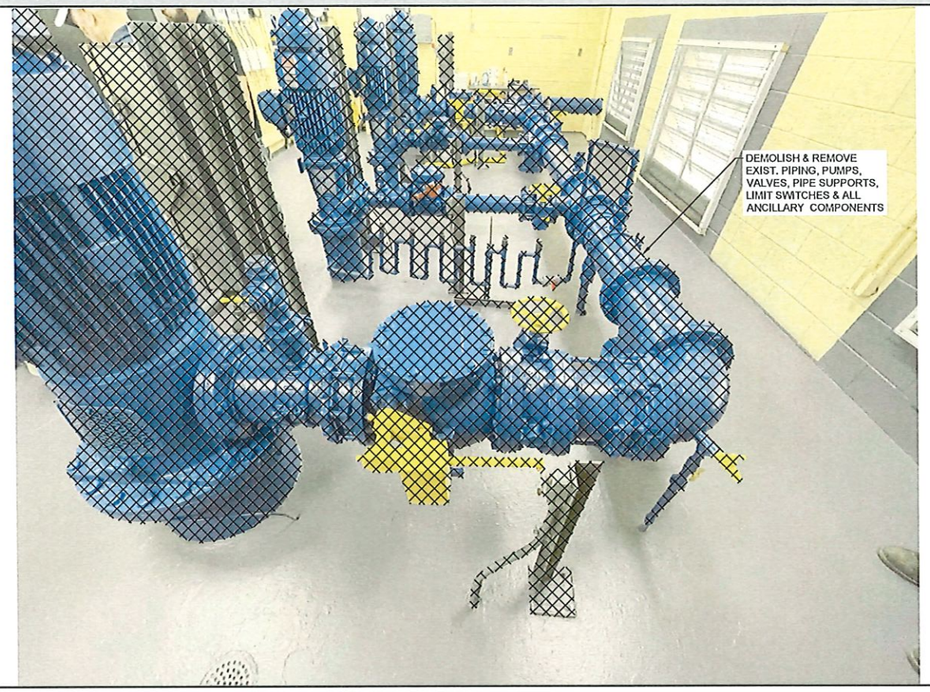

2 SITE PHOTO

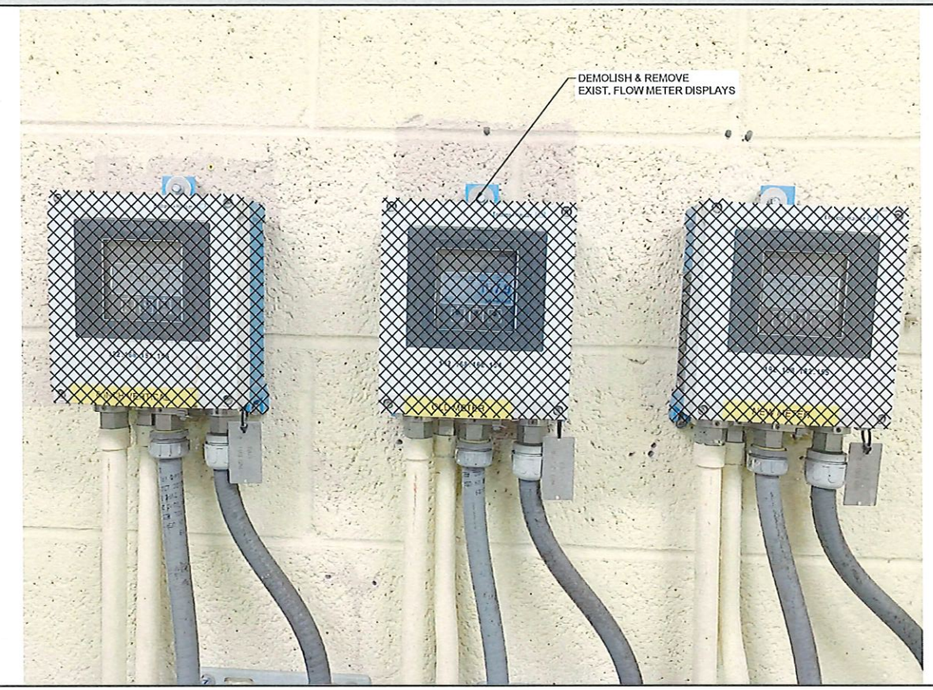

3 SITE PHOTO

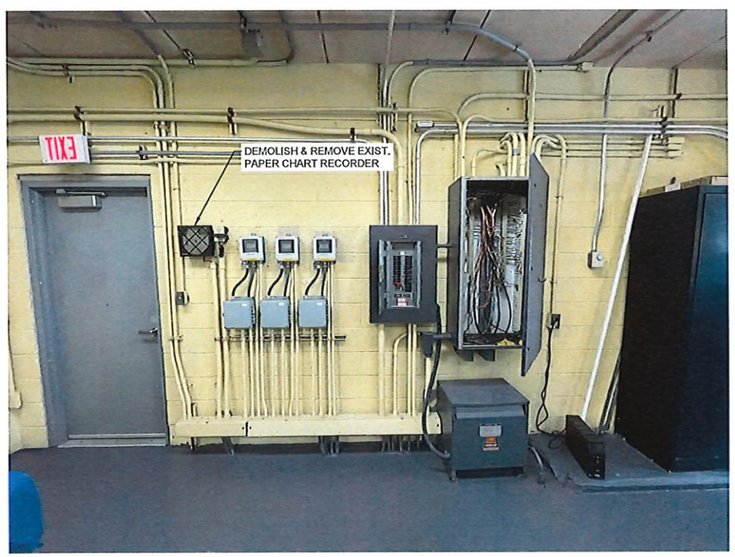

4 SITE PHOTO

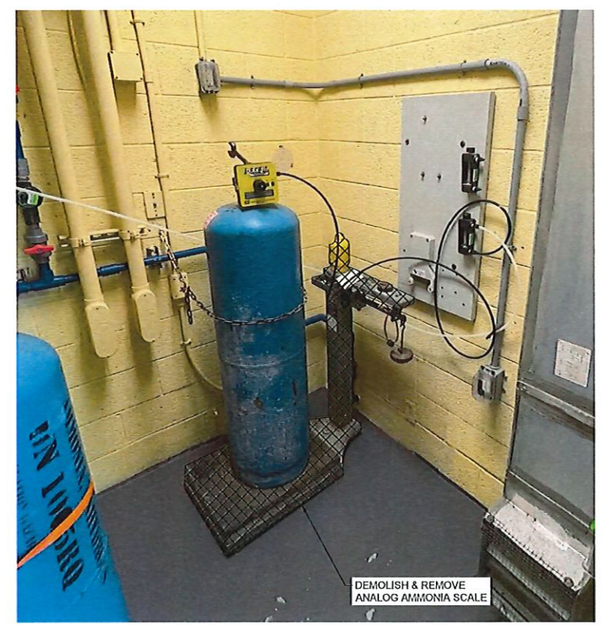

TETRA TECH
www.tetratech.com
10600 CHEVROLET WAY, SUITE 102
ESTERO, FL 33928
PHONE: (239) 390-1457 FAX: (239) 390-1769

Collier County

MARK	DATE	DESCRIPTION	BY

COLLIER COUNTY PUBLIC UTILITIES
GOODLAND PUMP STATION IMPROVEMENTS

INTERIOR DEOMLITION
PLAN - PUMP ROOM

PROJ: 200-08486-22002
DESN:
DRWN:
CHKD:

D-102

Copyright: Tetra Tech

Bar Measures 1 inch, otherwise drawing not to scale

5/21/2025 6:10:44 PM - Q:\PROJECTS\ORLANDO\ER\08486\200-08486-22002\CAD\SHEETFILES\PS IMPROVEMENTS\D-102 INTERIOR DEMOLITION PLAN PUMP ROOM.DWG - CYR, STEVE

1 SITE PHOTO

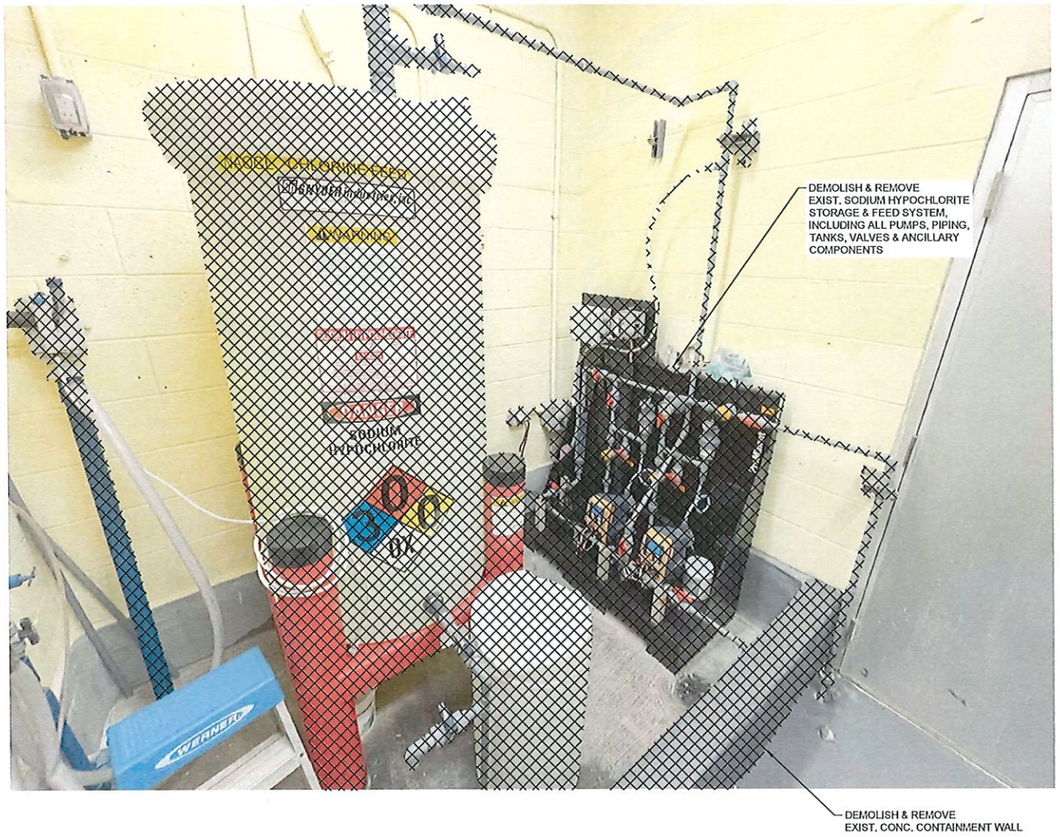

2 SITE PHOTO

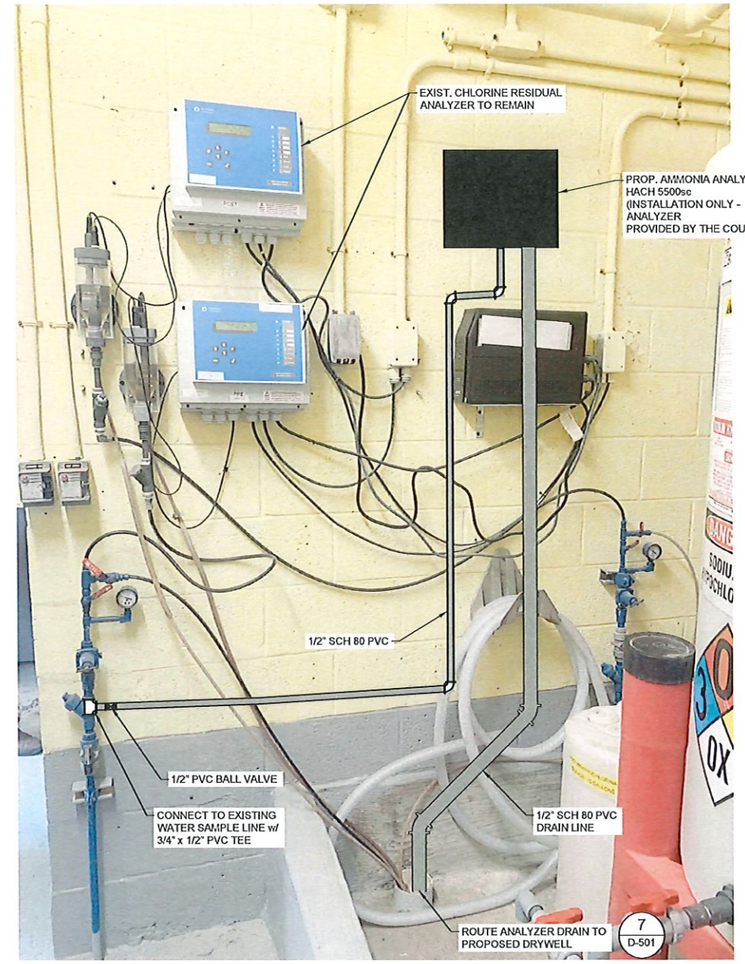

TETRA TECH
www.tetratech.com
10600 CHEVROLET WAY, SUITE 102
ESTERO, FL 33928
PHONE: (239) 390-1457 FAX: (239) 390-1759

Collier County

MARK	DATE	DESCRIPTION	BY

COLLIER COUNTY PUBLIC UTILITIES
GOODLAND PUMP STATION IMPROVEMENTS

INTERIOR DEMOLITION
PLAN - CHEMICAL ROOM

PROJ: 200-08486-22002
DESN:
DRWN:
CHKD:

D-103

Copyright: Tetra Tech

Bar Measures 1 inch, otherwise drawing not to scale

5/21/2025 6:11:16 PM - O:\PROJECTS\ORLANDO\IER\08486\200-08486-22002\CAD\SHEETFILES\PS IMPROVEMENTS\D-103 INTERIOR DEMOLITION PLAN CHEMICAL ROOM.DWG - CYR, STEVE

NOTES:

1. PROVIDE SCALETRON MODEL 2305 DIGITAL SINGLE CYLINDER SCALE WITH ACCRUPRO 7000-TS DIGITAL SCALE CONTROLLER.

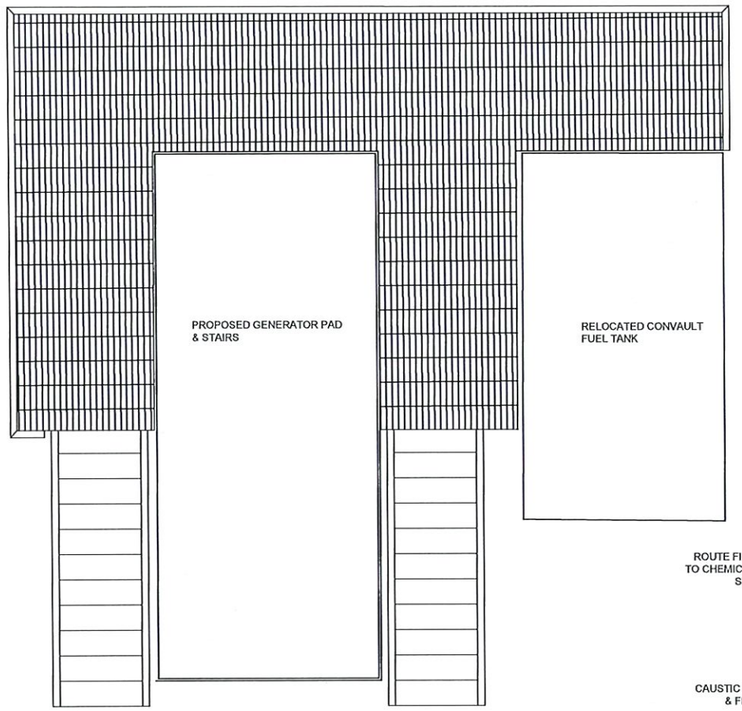

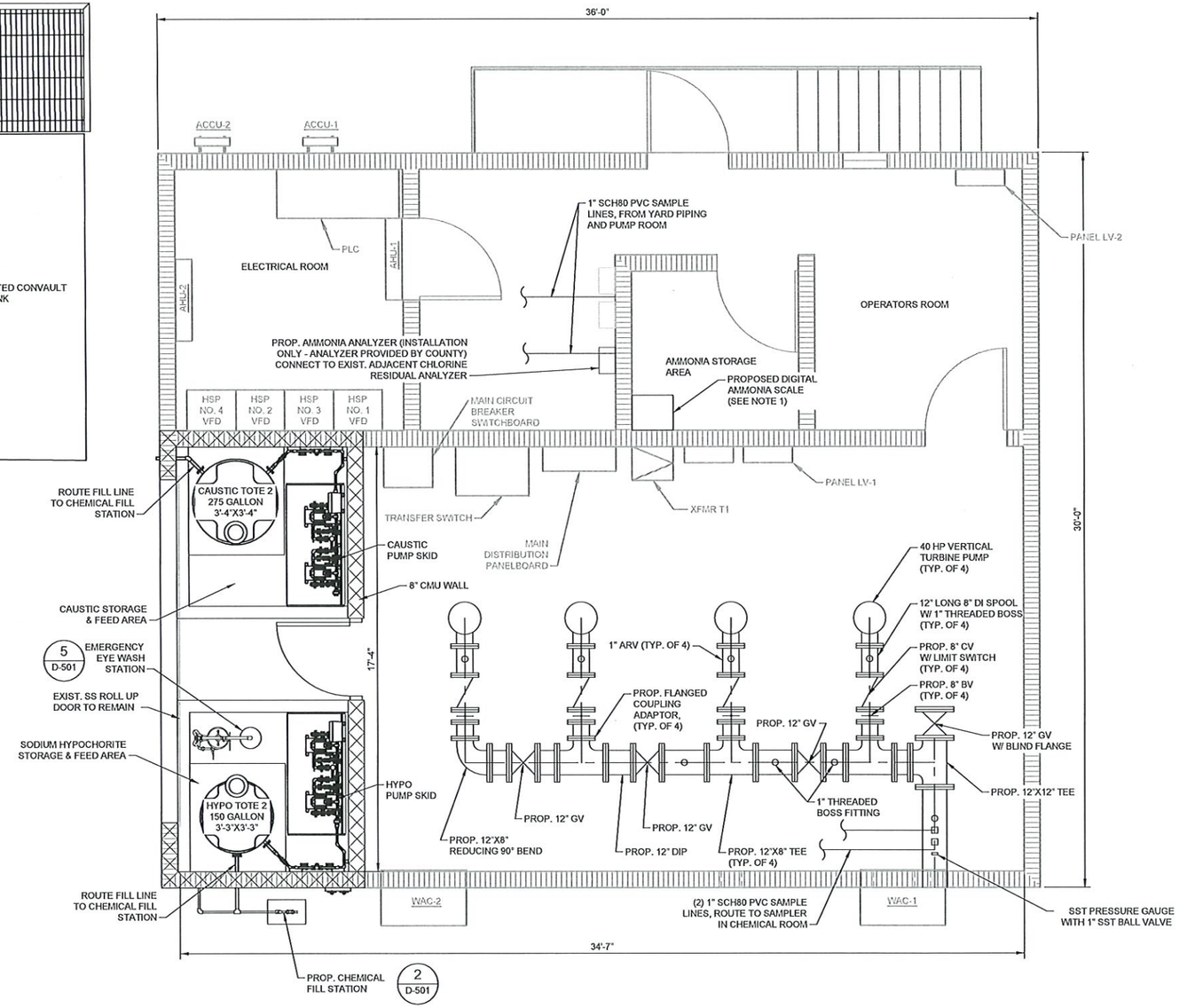

1 DETAIL
SCALE: NTS

PUMP STATION MODIFICATIONS PLAN

SCALE: 3/8"=1'-0"

TETRA TECH
www.tetratech.com
10600 CHEVROLET WAY, SUITE 102
ESTERO, FL 33928
PHONE: (239) 390-1457 FAX: (239) 390-1769

Collier County

MARK	DATE	DESCRIPTION	BY

COLLIER COUNTY PUBLIC UTILITIES
GOODLAND PUMP STATION IMPROVEMENTS

PUMP STATION MODIFICATIONS PLAN

PROJ: 200-08486-22002
DESN:
DRWN:
CHKD:

D-104

Copyright: Tetra Tech

Bar Measures 1 inch, otherwise drawing not to scale

7/9/2025 10:01:30 AM - O:\PROJECTS\ORLANDO\ER\08486\200-08486-22002\CAD\SHEETFILES\PS IMPROVEMENTS\D-104 PUMP STATION MODIFICATIONS PLAN.DWG - MARQUEZ, GERMAIN

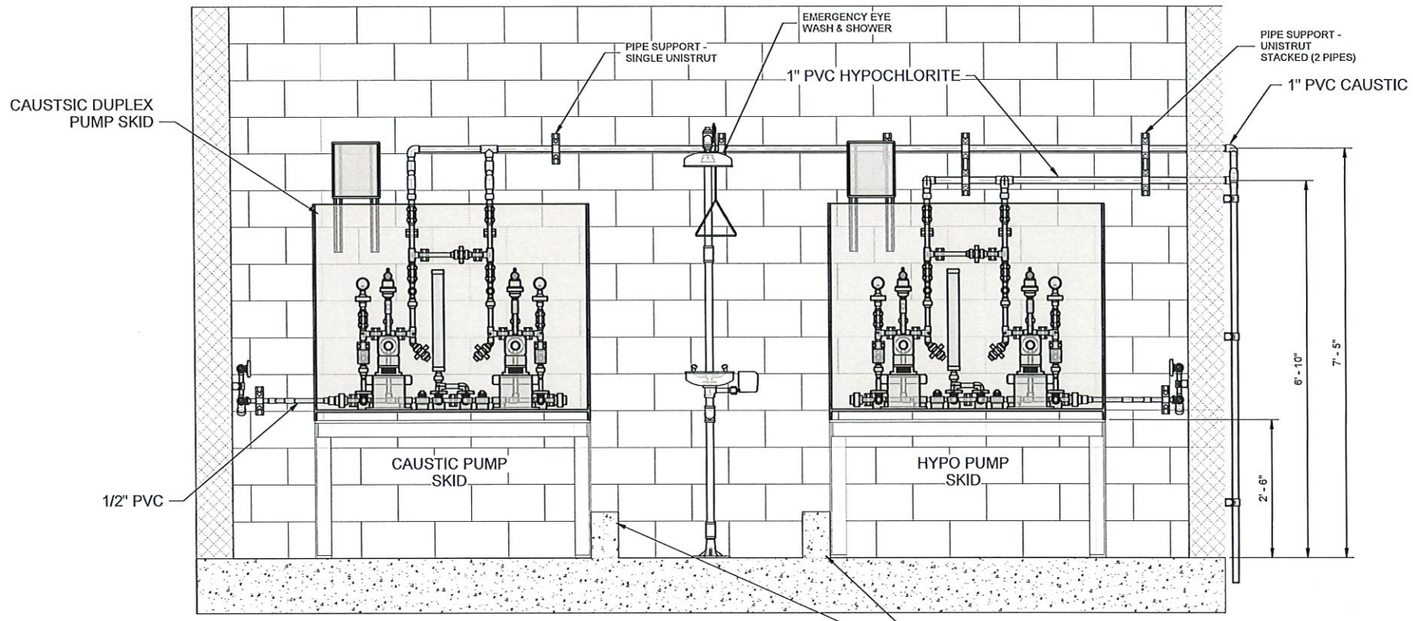

A SECTION
SCALE: 3/4" = 1'-0"

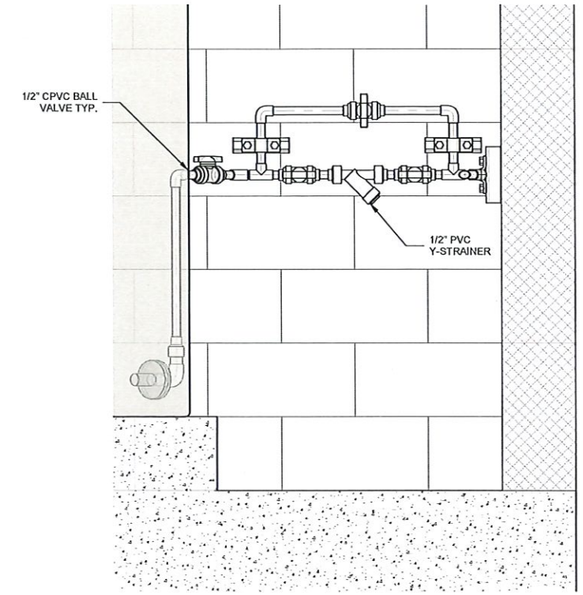

B SECTION
SCALE: 1 1/2" = 1'-0"

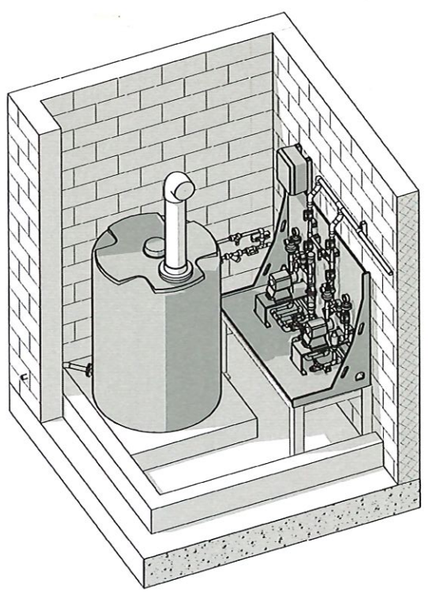

3D PERSPECTIVE NW
SCALE:

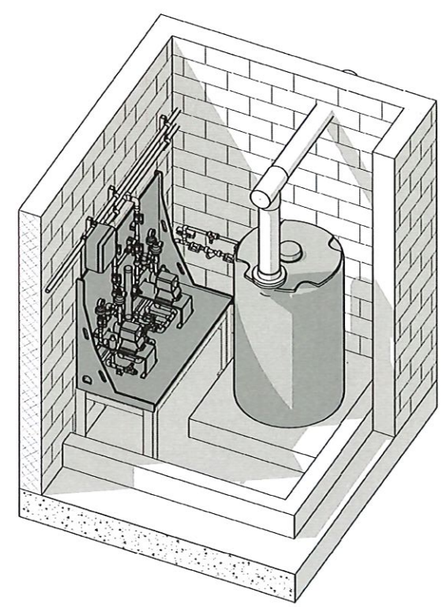

3D PERSPECTIVE SE
SCALE:

1' 0' 1'
SCALE: 1 1/2" = 1'-0"

1' 0' 1' 2' 3'
SCALE: 3/4" = 1'-0"

Bar measures 1 inch, otherwise drawing is not to scale

TETRA TECH
ENGINEERING BUSINESS NO. 2429
www.tetratech.com
201 EAST PINE STREET, SUITE 1000
ORLANDO, FLORIDA 32801
TEL: (407) 839-3955 FAX: (407) 839-3790

NOT FOR CONSTRUCTION

MARK	DATE	DESCRIPTION	BY

COLLIER COUNTY PUBLIC UTILITIES

GOODLAND PUMP STATION IMPROVEMENTS

PUMP STATION MODIFICATION SECTIONS AND PERSPECTIVES

PROJ:	200-08486-22002
DESN:	Designer
DRWN:	Author
CHKD:	Checker

D-105

Copyright: Tetra Tech

1/3/2025 11:29:25 AM BIM 360://200-08486-22002 GOODLAND PS UPGRADES/D-CHEM_ROOM-08486-22002-v2021.rvt

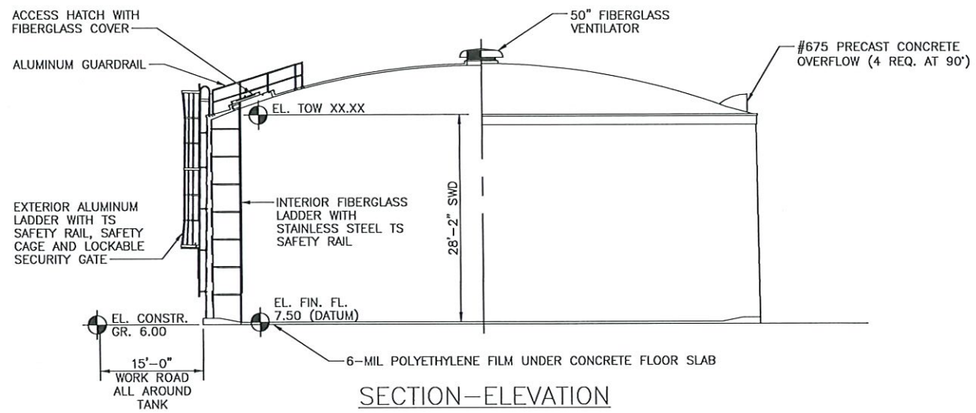

SECTION–ELEVATION

NOTES:
1. SHOTCRETE SHALL BE APPLIED BY OR UNDER DIRECT SUPERVISION OF NOZZLEMEN CERTIFIED BY THE AMERICAN CONCRETE INSTITUTE AS OUTLINED IN ACI CERTIFICATION PUBLICATION CP–60.
2. TENSION IN PRESTRESSING WIRE SHALL BE MEASURED BY AN ELECTRONIC DIRECT–READING STRESSOMETER ACCURATE TO WITHIN 2%.

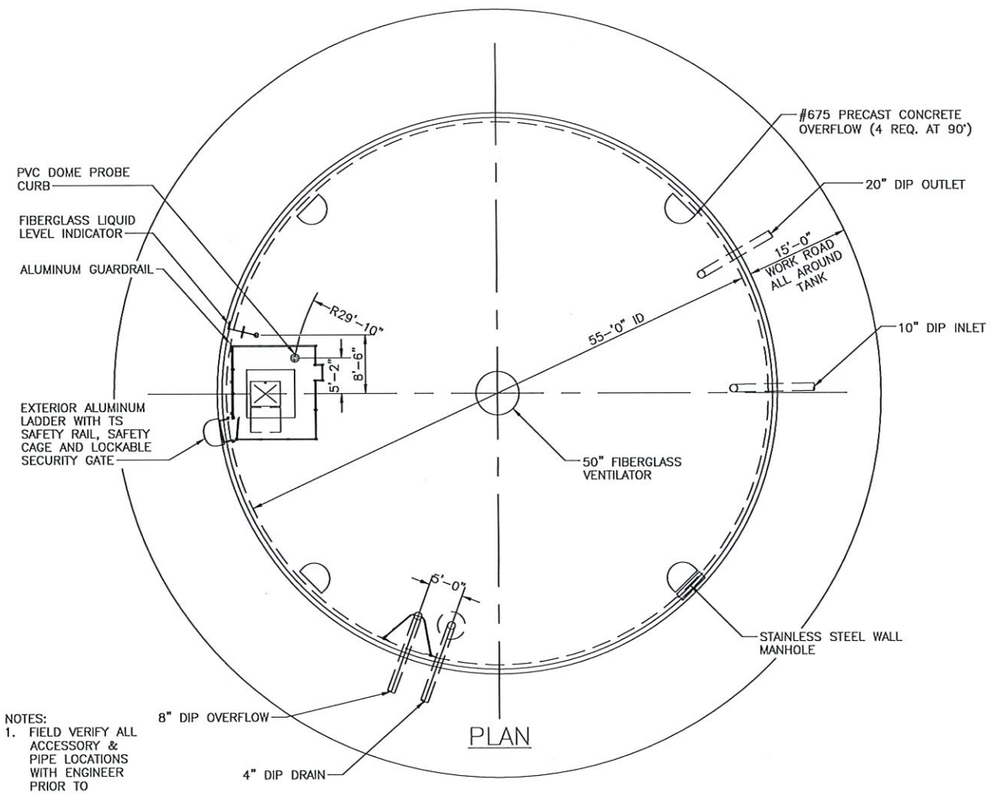

NOTES:
1. FIELD VERIFY ALL ACCESSORY & PIPE LOCATIONS WITH ENGINEER PRIOR TO PLACEMENT.

PLAN

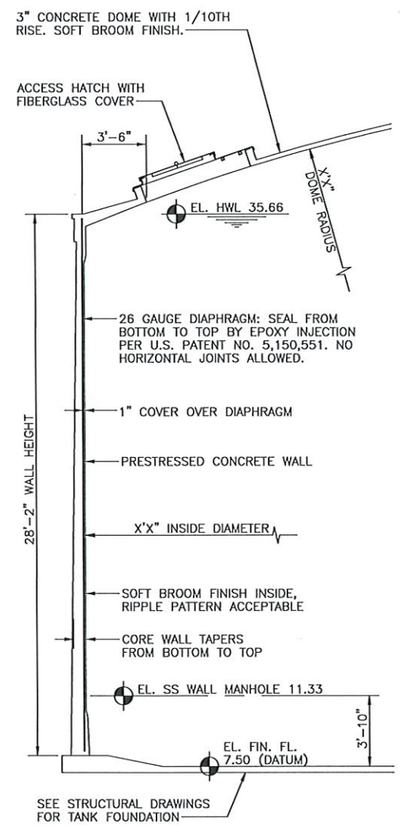

TYPICAL WALL SECTION

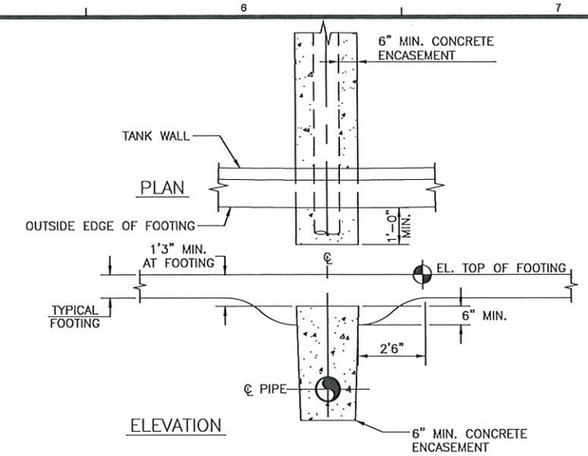

TYPICAL PIPE ENCASEMENT AT FOOTING

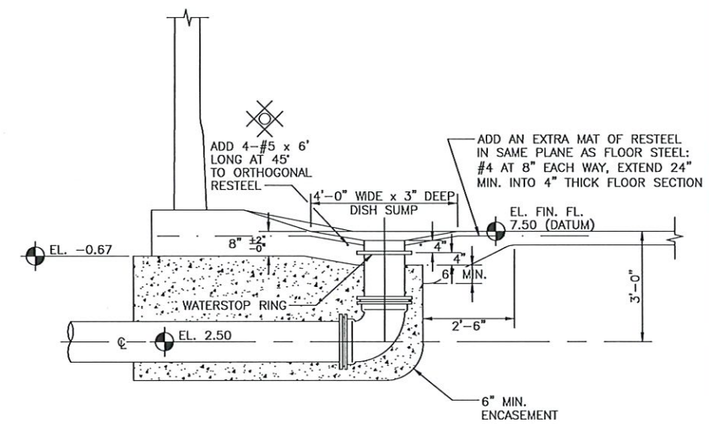

4" DIP DRAIN

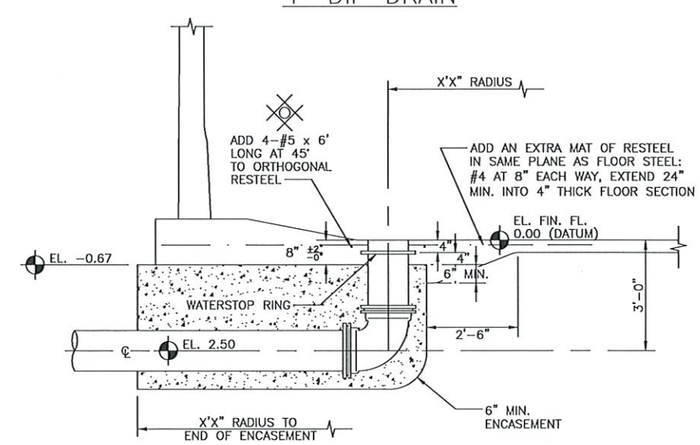

X" DIP INLET AND X" DIP OUTLET

TETRA TECH
www.tetratech.com
10600 CHEVROLET WAY, SUITE 102
ESTERO, FL 33928
PHONE: (239) 390-1467 FAX: (239) 390-1769

Collier County

MARK	DATE	DESCRIPTION	BY

COLLIER COUNTY PUBLIC UTILITIES
GOODLAND PUMP STATION IMPROVEMENTS

PROPOSED GROUND STORAGE TANK PLAN AND SECTIONS

PROJ: 200-08486-22002
DESN:
DRWN:
CHKD:

D-106

Copyright: Tetra Tech

Bar Measures 1 inch, otherwise drawing not to scale

5/21/2025 6:12:24 PM - O:\PROJECTS\ORLANDO\IER\08486\200-08486-22002\CAD\SHEETFILES\PS IMPROVEMENTS\D-106 GROUND STORAGE TANK PLAN AND SECTIONS.DWG - CYR, STEVE

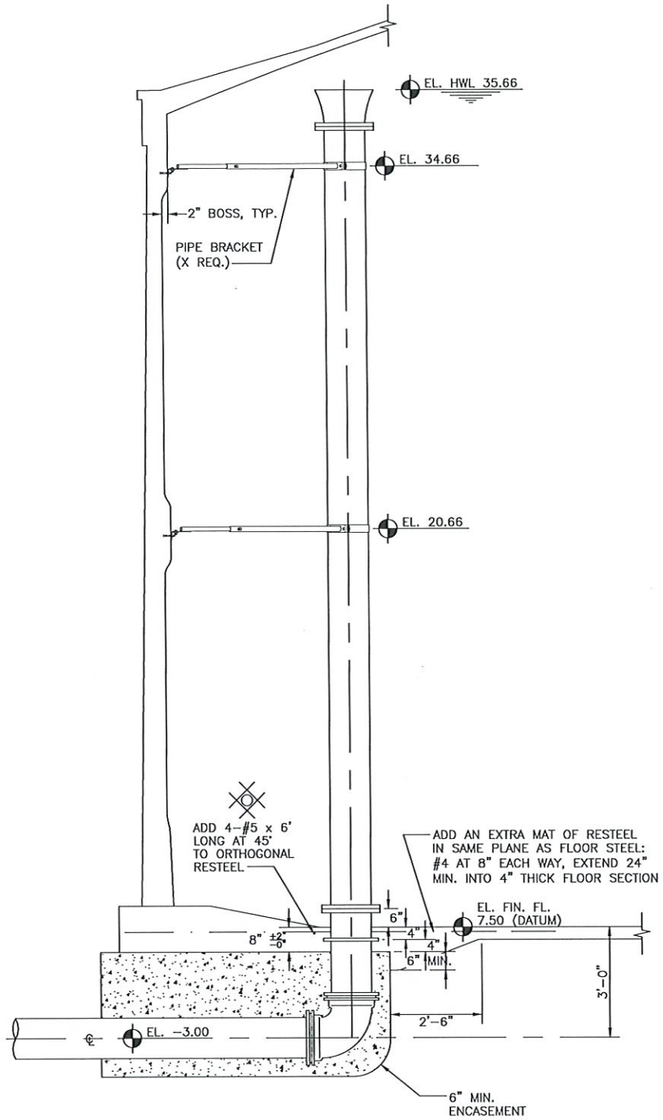

X" DIP OVERFLOW

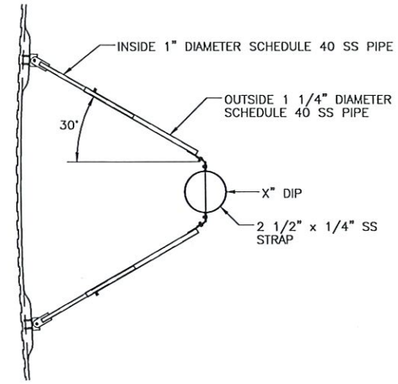

PIPE BRACKET (X REQ.)

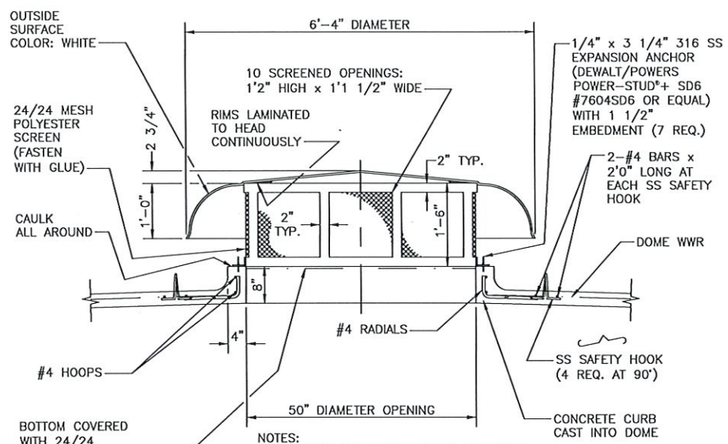

NOTES:
1. MAXIMUM LOAD RATING FOR SS SAFETY HOOK, IN ANY DIRECTION: 3100 LBS.
2. INSTALLATION TORQUE FOR 1/4" 316 SS EXPANSION ANCHORS (DEWALT/POWERS POWER-STUD"+ SD6): 6 FT.-LBF.

50" FIBERGLASS VENTILATOR

(BV#: VEN-2)

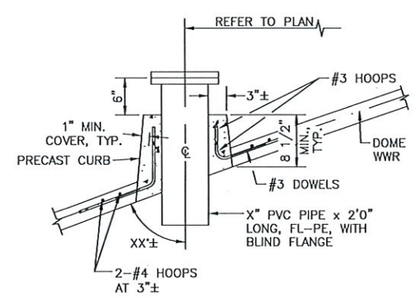

NOTES:
1. PLACE PIPE PLUMB.

X" PVC DOME PROBE CURB

(BV#: DPC-3)

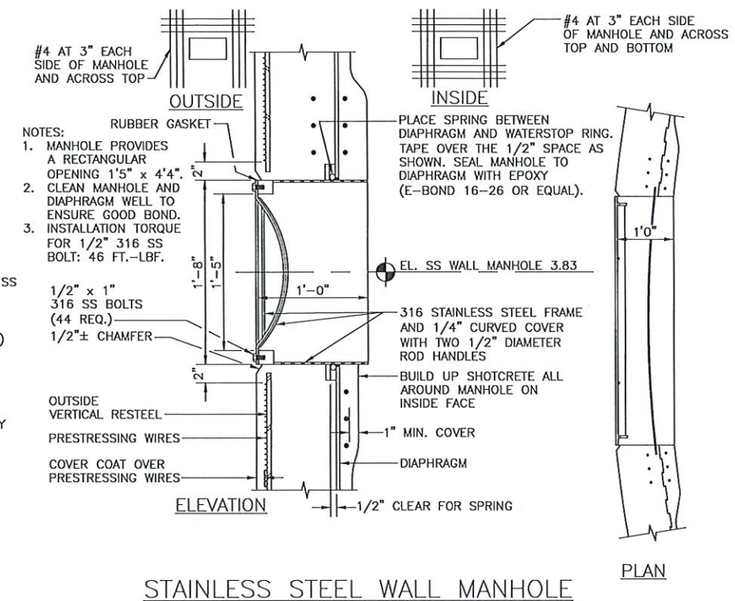

NOTES:
1. MANHOLE PROVIDES A RECTANGULAR OPENING 1'5" x 4'4".
2. CLEAN MANHOLE AND DIAPHRAGM WELL TO ENSURE GOOD BOND.
3. INSTALLATION TORQUE FOR 1/2" 316 SS BOLT: 46 FT.-LBF.

STAINLESS STEEL WALL MANHOLE

(BV#: MAN-CUR-2) CROM REF.: MHC-20x55

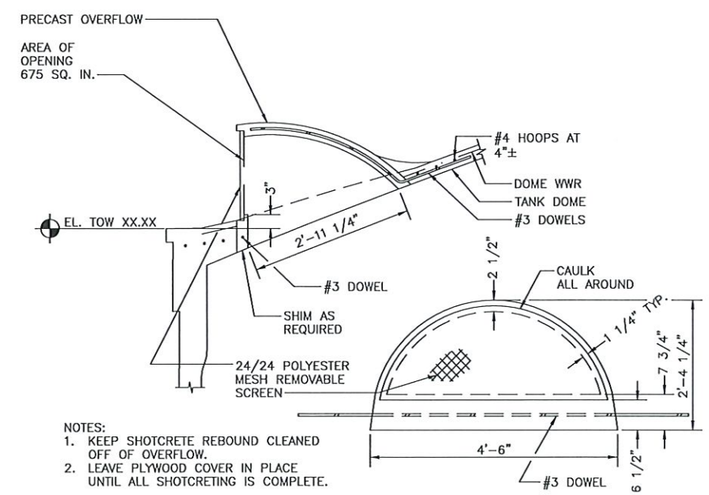

NOTES:
1. KEEP SHOTCRETE REBOUND CLEANED OFF OF OVERFLOW.
2. LEAVE PLYWOOD COVER IN PLACE UNTIL ALL SHOTCRETING IS COMPLETE.

#675 PRECAST CONCRETE OVERFLOW (X REQ.)

(BV#: OVF-2)

TETRA TECH
www.tetratech.com
10600 CHEVROLET WAY, SUITE 102
ESTERO, FL 33928
PHONE: (239) 390-1467 FAX: (239) 390-1769

Collier County

MARK	DATE	DESCRIPTION	BY

COLLIER COUNTY PUBLIC UTILITIES
GOODLAND PUMP STATION IMPROVEMENTS

PROPOSED GROUND STORAGE TANK SECTIONS AND DETAILS

PROJ: 200-08486-22002
DESN:
DRWN:
CHKD:

D-107

Copyright: Tetra Tech

Bar Measures 1 inch, otherwise drawing not to scale

5/21/2025 6:12:27 PM - O:\PROJECTS\ORLANDO\IER\08486\200-08486-22002\CAD\SHEETFILES\PS IMPROVEMENTS\D-108 GROUND STORAGE TANK PLAN AND SECTIONS.DWG - CYR, STEVE

NOTES:
1. INSTALLATION TORQUE FOR 3/8" 316 SS EXPANSION ANCHORS (DEWALT/POWERS POWER-STUD®+ SD6): 25 FT.-LBF.
2. INSTALLATION TORQUE FOR 1/4" 316 SS BOLT: 6.5 FT.-LBF.

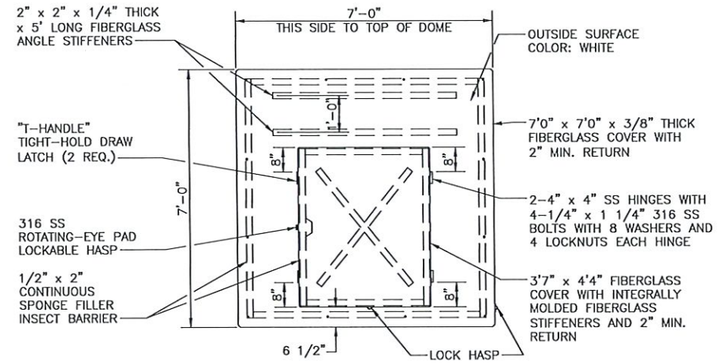

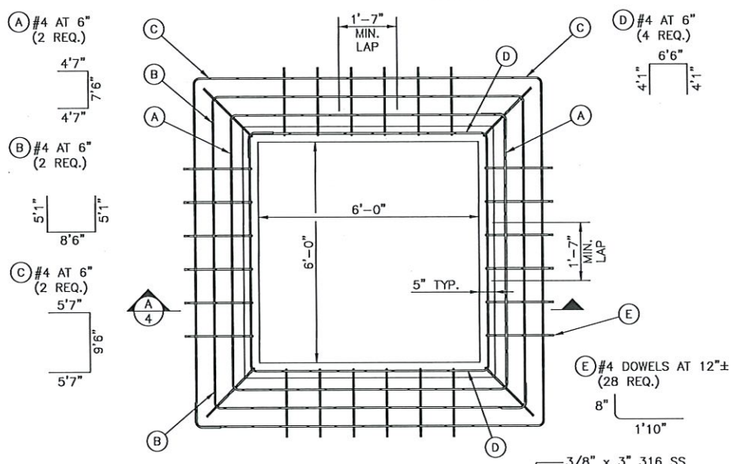

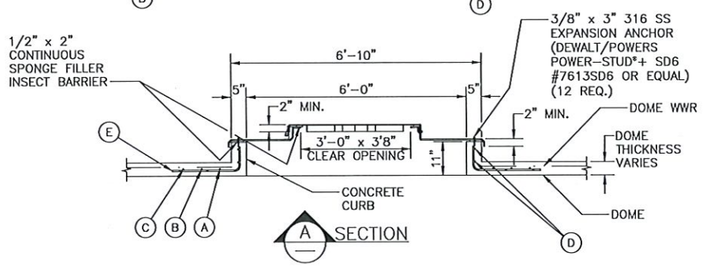

ACCESS HATCH WITH FIBERGLASS COVER
(BV#: HAT-1)

NOTES:
1. USE HOLLAENDER HIGH TENSILE ALUMINUM ALLOY FITTINGS.
2. USE 1 1/2" SCHEDULE 40/6061-T6 ALUMINUM PIPE.
3. TOE-BOARDS TO BE 6061-T6 ALUMINUM.
4. USE 1/2" x 3 3/4" 316 SS EXPANSION ANCHORS (DEWALT/POWERS POWER-STUD®+ SD6 #7622SD6 OR EQUAL) WITH 2" MAX. EMBEDMENT (42 REQ.).
5. 316 SS CHAIN WITH CLASS "D" HOOK AT ONE END AND THREADED CONNECTING LINK AT OTHER END x 2'6" LONG.
6. ALL ALUMINUM IN DIRECT CONTACT WITH CONCRETE SHALL BE COATED WITH A MINIMUM 8.0 DRY MIL THICKNESS SERIES 46-465 H.B. TNEMECOL OR EQUAL.
7. INSTALLATION TORQUE FOR 1/2" 316 SS EXPANSION ANCHORS (DEWALT/POWERS POWER-STUD®+ SD6): 40 FT.-LBF.
8. INSTALLATION TORQUE FOR 3/8" 316 SS BOLT: 20.5FT.-LBF.

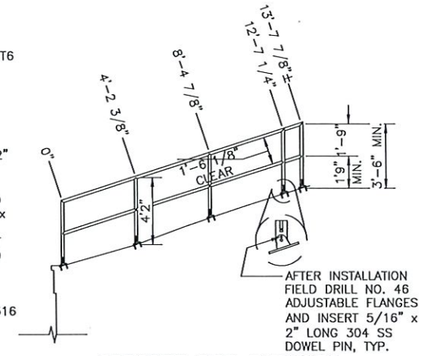

OPPOSITE SIDE ELEVATION

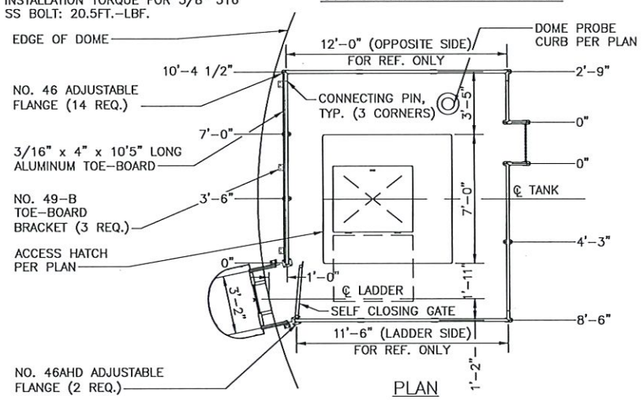

PLAN

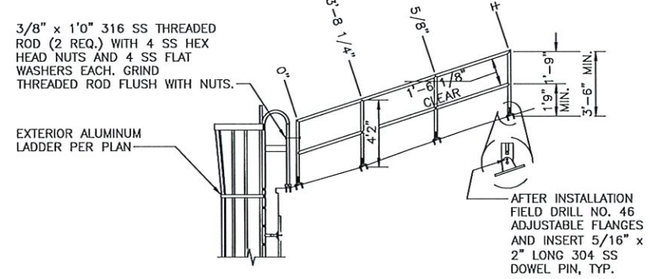

LADDER SIDE ELEVATION

ALUMINUM GUARDRAIL
(BV#: HAN-6B)

NOTES:
1. INSTALLATION TORQUE FOR 1/4" 316 SS EXPANSION ANCHORS (DEWALT/POWERS POWER-STUD®+ SD6): 6 FT.-LBF.
2. INSTALLATION TORQUE FOR 1/4" 316 SS BOLT: 6.5 FT.-LBF.

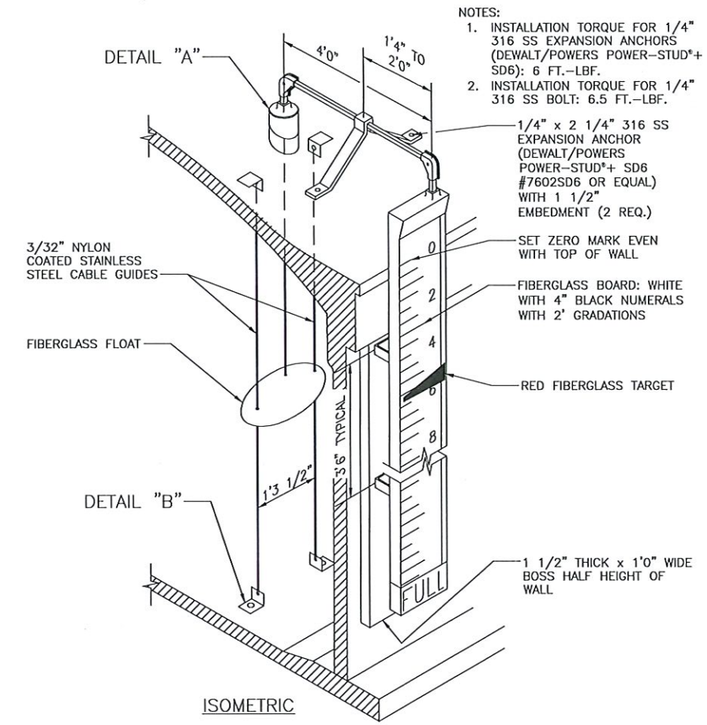

ISOMETRIC

FIBERGLASS LIQUID LEVEL INDICATOR
(BV#: LLI-2)

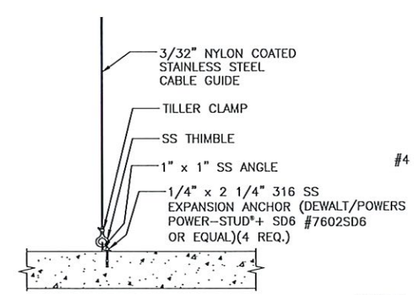

DETAIL "B" TYPICAL TOP AND BOTTOM

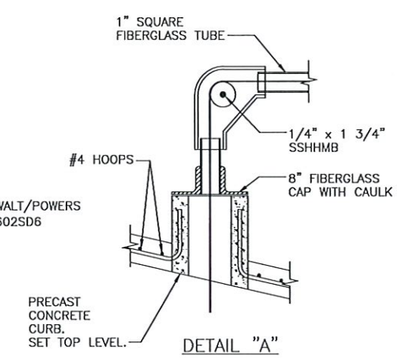

DETAIL "A"

TETRA TECH
www.tetratech.com
10600 CHEVROLET WAY, SUITE 102
ESTERO, FL 33928
PHONE: (239) 390-1467 FAX: (239) 390-1769

Collier County

MARK	DATE	DESCRIPTION	BY

COLLIER COUNTY PUBLIC UTILITIES
GOODLAND PUMP STATION IMPROVEMENTS

PROPOSED GROUND STORAGE TANK SECTIONS AND DETAILS

PROJ: 200-08486-22002
DESN:
DRWN:
CHKD:

D-108

Copyright: Tetra Tech

Bar Measures 1 inch, otherwise drawing not to scale

5/21/2025 6:12:32 PM - O:\PROJECTS\ORLANDO\ER\08486\200-08486-22002\CAD\SHEETFILES\PS IMPROVEMENTS\D-108 GROUND STORAGE TANK PLAN AND SECTIONS.DWG - CYR, STEVE

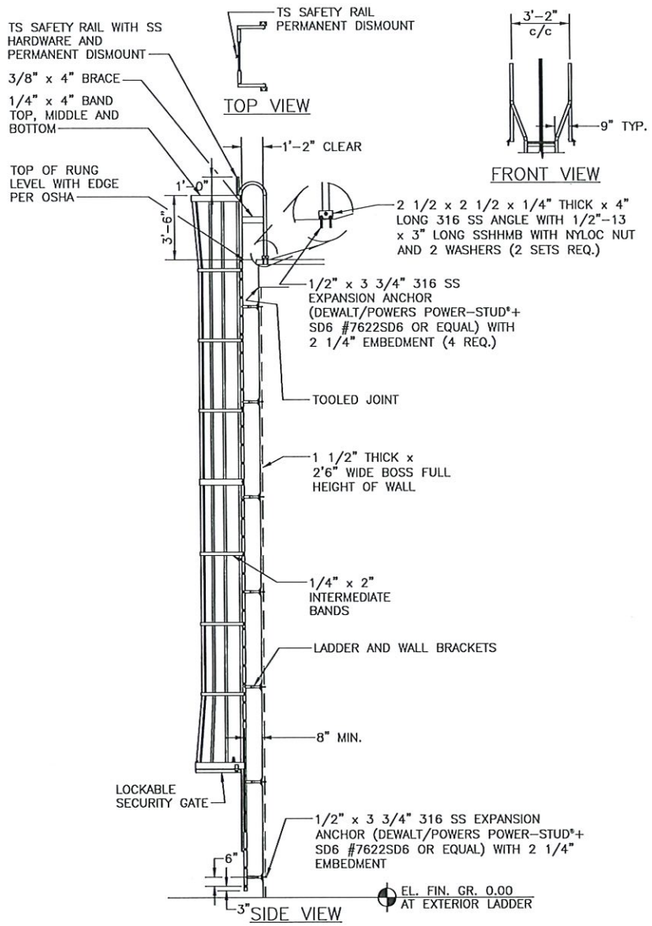

NOTES:
1. LADDER HAS 2 x 2 x 1/8" SQUARE TUBE RAILS WITH 1 1/4" DIAMETER EXTRUDED RUNGS SPACED AT 1'0" c/c.
2. ALL MATERIAL TO BE NOMINAL DIAMETER SCHEDULE 40 ALUMINUM PIPE OR SQUARE TUBE 6061-T6 OR 6063-T6.
3. PLATES AND GUSSETS TO BE STRUCTURAL GRADE ALUMINUM 6061-T6.
4. ALL ALUMINUM IN DIRECT CONTACT WITH CONCRETE SHALL BE COATED WITH A MINIMUM 8.0 DRY MIL THICKNESS SERIES 46-465 H.B. TNEMECOL OR EQUAL.
5. ALL RAILS WHEN PROPERLY INSTALLED SHALL MEET OR EXCEED OSHA REQUIREMENTS.
6. INSTALLATION TORQUE FOR 1/2" 316 SS EXPANSION ANCHORS (DEWALT/POWERS POWER-STUD®+ SD6): 40 FT.-LBF.
7. INSTALLATION TORQUE FOR 1/2" 316 SS BOLT: 46 FT.-LBF.

EXTERIOR ALUMINUM LADDER WITH TS SAFETY RAIL, SAFETY CAGE AND LOCKABLE SECURITY GATE

(BV#: X-LAD-5A) CROM SHOP REF.: X-LAD-LB-FAB-ST X-LAD-9-ST

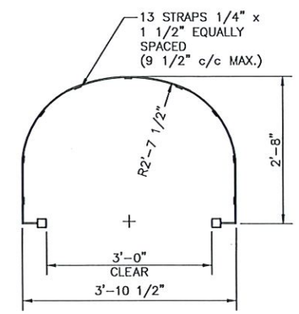

CAGE AT TOP FLARED SECTION

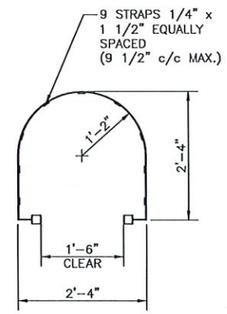

CAGE SECTION AT MIDDLE

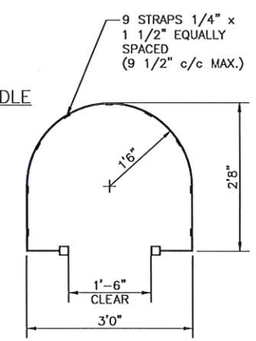

CAGE AT BOTTOM FLARED SECTION

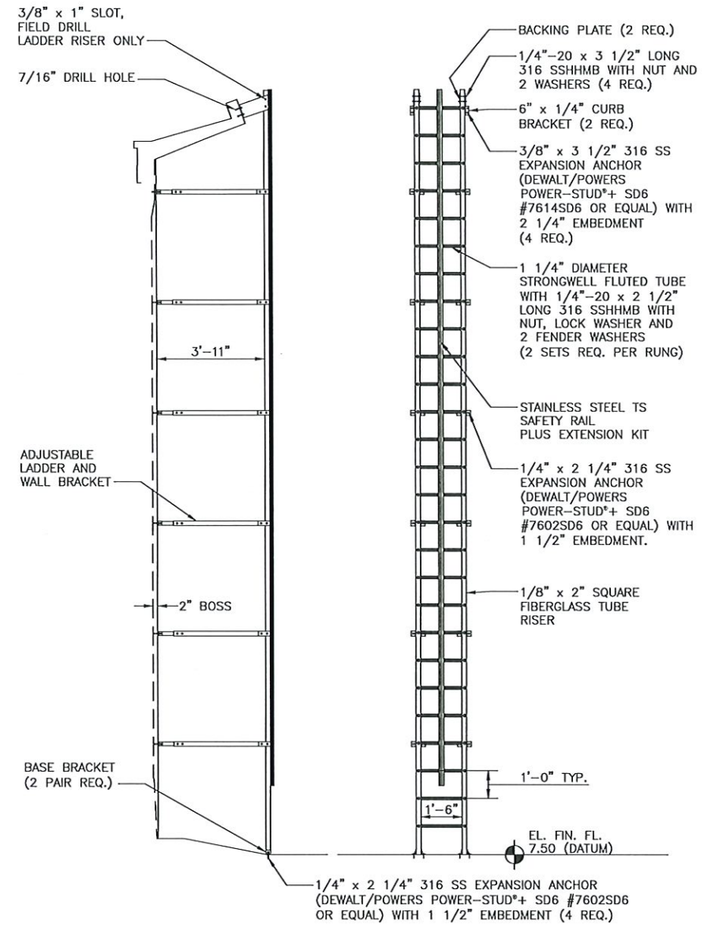

NOTES:
1. 1/4" x 2" FLAT BAR FIBERGLASS CROSS BRACE TO BE PROVIDED FOR BRACING WALL BRACKET SUPPORTS ON EVERY BRACKET.
2. INSTALLATION TORQUE FOR 1/4" 316 SS EXPANSION ANCHORS (DEWALT/POWERS POWER-STUD®+ SD6): 6 FT.-LBF.
3. INSTALLATION TORQUE FOR 3/8" 316 SS EXPANSION ANCHORS (DEWALT/POWERS POWER-STUD®+ SD6): 25 FT.-LBF.
4. INSTALLATION TORQUE FOR 1/4" 316 SS BOLT: 6.5 FT.-LBF.

INTERIOR FIBERGLASS LADDER WITH STAINLESS STEEL TS SAFETY RAIL

(BV#: I-LAD-2) CROM SHOP REF.: I-LAD-FG-RUNG-FAB-ST

TETRA TECH
www.tetratech.com
10600 CHEVROLET WAY, SUITE 102
ESTERO, FL 33928
PHONE: (239) 390-1457 FAX: (239) 390-1769

Collier County

MARK	DATE	DESCRIPTION	BY

COLLIER COUNTY PUBLIC UTILITIES
GOODLAND PUMP STATION IMPROVEMENTS

PROPOSED GROUND STORAGE TANK SECTIONS AND DETAILS

PROJ: 200-08486-22002
DESN:
DRWN:
CHKD:

D-109

Copyright: Tetra Tech

Bar Measures 1 inch, otherwise drawing not to scale

5/21/2025 6:12:37 PM - O:\PROJECTS\ORLANDO\IER\08486200-08486-22002\CAD\SHEETFILES\PS IMPROVEMENTS\D-106 GROUND STORAGE TANK PLAN AND SECTIONS.DWG - CYR, STEVE

A SECTION

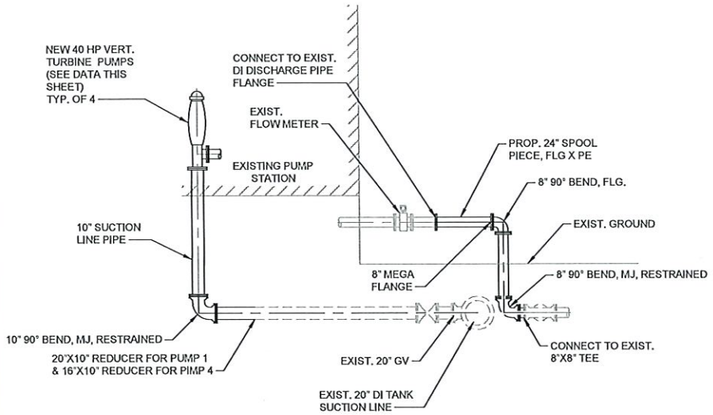

A SECTION
SCALE: 1" = 5'

B SECTION

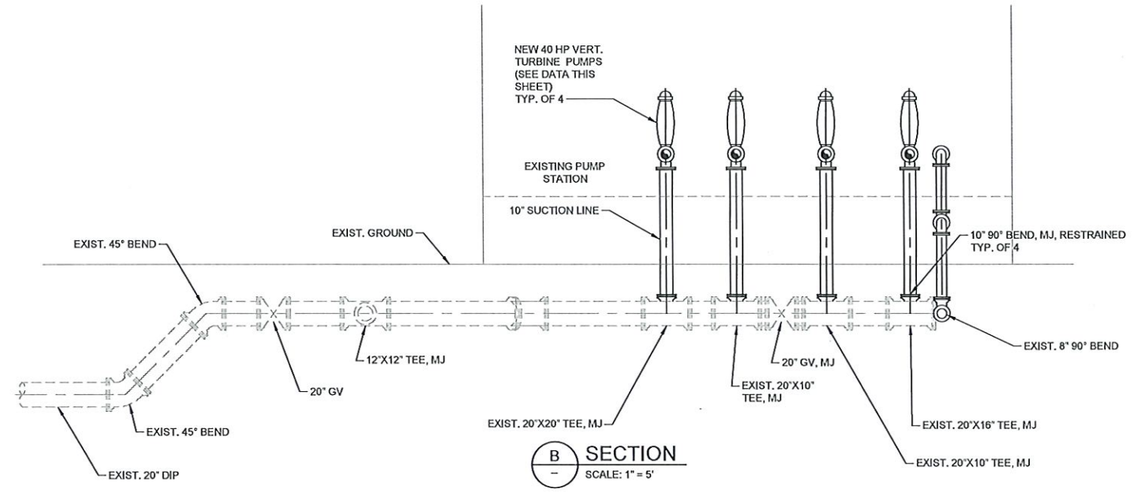

B SECTION
SCALE: 1" = 5'

C PUMP DATA

GOULDS WATER TECHNOLOGY a xylem brand

Performance Curve

Product Name:	DWT - Deep Well Lineshaft Turbine	Quote Name	Goodland PS
Product Id:	DWT	Quote Number	9003-210408-021

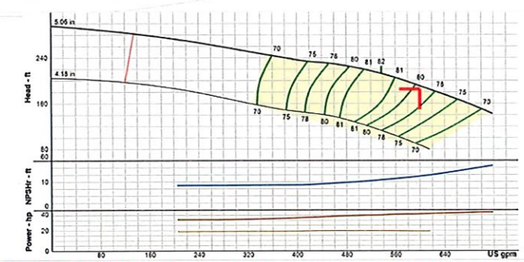

Curve & hydraulic data presented is nominal performance based on ANSI/HI 14.6 acceptance grade 1B. Design values are guaranteed within the following tolerances: Flow ± 5%, Head ± 3%, and optionally either Power + 4% or Efficiency - 3% at manufacturer's discretion.

Series	DWT	Max Power on Design Curve	38.00 Hp
Size	8FDHC	Flow at BEP	538 USgpm
Additional Size	-	Head at BEP	212 ft
Speed	1,770 RPM	NPSH Required	12 ft
Number of Stages	9	Specified NPSH Avail.	32.99 ft
Frequency	60 Hz	Specified NPSH Avail. Margin	1.1
Impeller Trim	5.06 in	Min Flow	134 USgpm
Additional Impeller	-	Shut Off Head	296 ft
Specified Flow	600 USgpm	Shut Off Power	26.8 Hp
Specified Head	185 ft	Shut Off Disc Pressure	128 psi
Flow at Design	600 USgpm	Fluid Type	Water
Head at Design	191 ft	Water Temperature	75 °F
Run Out Flow	718 USgpm	Allowable Sphere Size	0.38 in
Run Out Head	142 ft	Exact Bowl Diameter	7.5 in
Run Out Power	38 Hp	Curve Id	E6408REFC2
Run Out Efficiency	67.7 %	Thrust K Factor	7.9 lb/ft
Run Out NPSHr	15.7 ft	Add Thrust K Factor	7.9 lb/ft
Efficiency at Design	79.60 %	Max Lateral	0.56 in
Guaranteed Efficiency at Design	77.21 %	Total Flow Derate Factor	1
Best Efficiency	82 %	Total Head Derate Factor	1
Driver Size	40 Hp	Total Efficiency Derate Factor	1
Power at Design	36 Hp	Total NPSHr Derate Factor	1
Guaranteed Power	37.75 Hp	Acceptance Grade	1B
Flow on Design Trim @ Max Power	718 USgpm		
Service Factor	No		

D PUMP DATA (OUTLINE DRAWING)

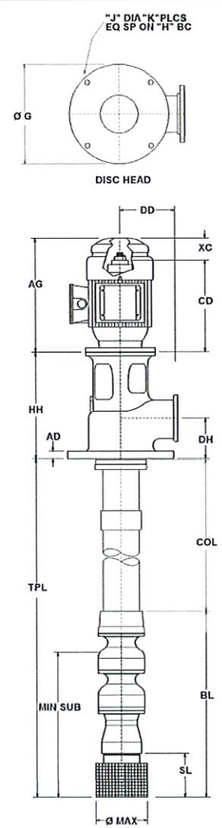

Dimensions			Override
Dim G [Mounting Flange Dia]:	19.00	in	
J [Mounting Flange Hole Dia]	0.75	in	
K [Mounting Hole Places]	4		
H [Mounting Flange Bolt Circle]	17.00	in	
Discharge Head Size	6.00	in	
BD Head [Discharge Head Base Dia]	16.50	in	
HH [Head Height]	21.00	in	
AD [Mounting Flange Thickness]	0.88	in	
DD [Disch Flange Stickout]	10.00	in	
DH [Disch Flange Height]	9.00	in	
R [Hanger Flange OD]	7.31	in	☐
Column Length (COL)	150.00	in	
COL [Column Diameter]	6.00	in	
TPL [Total Pump Length]	242.88	in	
MIN SUB [Minimum Submergence]	30.26	in	☐
MAX [Max Assembly OD]	8.63	in	
BL [Bowl Assembly Length]	92.88	in	
SU [Shaft Stickup]	8.00	in	☐
SL [Suction Length]	3.12	in	☐
Discharge Flange:	6"-150#		
Suction Bowl Size:	6"		

DWT-DITM 8FDHC, 9 Stages
Deep Well Lineshaft Turbine

E PUMP DATA (CROSS SECTIONAL DRAWING)

DWT-DITM 8FDHC, 9 Stages
Deep Well Lineshaft Turbine

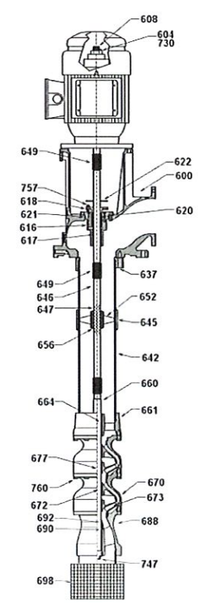

TETRA TECH
www.tetratech.com
10600 CHEVROLET WAY, SUITE 102
ESTERO, FL 33928
PHONE: (239) 390-1467 FAX: (239) 390-1769

Collier County

MARK	DATE	DESCRIPTION	BY

COLLIER COUNTY PUBLIC UTILITIES
GOODLAND PUMP STATION IMPROVEMENTS
SECTIONS

PROJ: 200-08486-22002
DESN:
DRWN:
CHKD:

D-201

Copyright: Tetra Tech

Bar Measures 1 inch, otherwise drawing not to scale

5/21/2025 6:14:02 PM - Q:\PROJECTS\ORLAND\DIER\08486\200-08486-22002\CAD\SHEETFILES\PS IMPROVEMENTS\D-201SECTIONS.DWG - CYR, STEVE

1 PUMP DATA

GOULDS WATER TECHNOLOGY
a xylem brand

PERFORMANCE CURVE

Quote ID: 9001-250520-017.0:1 QTY: 1
VIS-BATM 9RCLC, 1 Stage
Tencarva Southern Sales Nashville

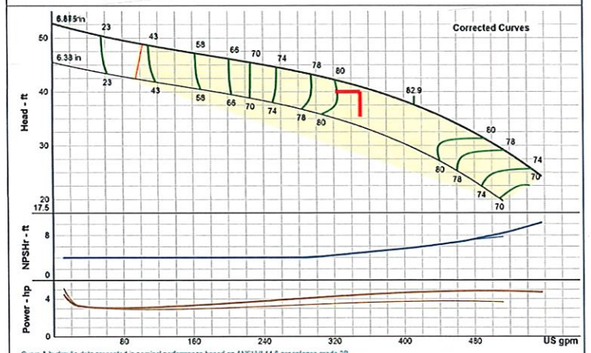

Curve & hydraulic data presented is nominal performance based on ANSI/HI 14.6 acceptance grade 2B.
Design values are guaranteed within the following tolerances: Flow ± 8%, Head ± 5%, and optionally either Power + 8% or Efficiency - 5% at manufacturer's discretion.

Specified Flow	350.00 USgpm	Shut Off TDH (Bowl)	52.7 ft	Driver Size Criteria	NOL Power Across Design Curve
Specified TDH	40.00 ft	Shut Off TDH (Disch Flange)	52.2 ft	Allow Service Factor	No
Rated Speed	1730 RPM	Shut Off Pressure (Bowl)	22.8 psi	kWh per 1000 gal	0.00000
Atmospheric Pressure	14.70 psi	Shut Off Pressure (Disch Flange)	22.6 psi	NPSHr at Design	4.9 ft
Pumping Level	0.50 ft	Run Out Flow	557.0 USgpm	NPSH Margin at Design	35.1 ft
NPSHa at Grade	34.0 ft	Run Out TDH (Bowl)	24.3 ft	Actual Submergence	28.13 in
NPSHa at 1st Impeller	40.0 ft	Run Out TDH (Disch Flange)	23.4 ft	Thrust K-Factor	4.9 lb/ft
Fluid	Water	Run Out Pressure (Bowl)	10.5 psi	Thrust at Design	239.6 lb
Fluid Temperature	68.0 °F	Run Out Pressure (Disch Flange)	10.1 psi	Thrust at Shut Off	305.2 lb
Specific Gravity	1.0000	Bowl Efficiency at Design	81.70 %	Thrust at Run Out	148.5 lb
Viscosity	1.0017 cP	Best Efficiency	82.90 %	Bowl Material	Cast Iron with Glass Enamel
Vapor Pressure	0.3393 psi	BEP Flow	412.0 USgpm		
Density	62 lbs/ft³	Design Flow % BEP	84.95 %	Bowl Material Derate Factor	1.00
Design Flow	350.0 USgpm	Pump Efficiency	80.64 %	Impeller Material	316SS
Min Flow (MCSF)	103.0 USgpm	Friction Loss at Design	0.17 ft	Impeller Matl Derate Factor	1.00
Design TDH (Bowl)	41.0 ft	Power at Design	4.6 Hp	Total Flow Derate Factor	1.00
Design TDH (Disch Flange)	40.3 ft	NOL Power	4.9 Hp	Total Head Derate Factor	1.00
Design Pressure (Bowl)	17.7 psi	Max Power (NOL) Flow	490.0 USgpm	Total Efficiency Derate Factor	1.00
Design Pressure (Disch Flange)	17.5 psi	Recommended Power	5.00 Hp		

DO NOT USE FOR CONSTRUCTION UNLESS CERTIFIED	
Certified By	
Project	Goodlands PS Improvements
Tag	
PO Number	
Serial Number	

2 PUMP DATA (OUTLINE DRAWING)

GOULDS WATER TECHNOLOGY
a xylem brand

OUTLINE DRAWING

Quote ID: 9001-250520-017.0:1 QTY: 1
VIS-BATM 9RCLC, 1 Stage
Tencarva Southern Sales Nashville

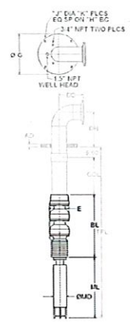

DIMENSIONS	
E	9.81 in
BL [Bowl Assembly Length]	28.13 in
ML [Motor Length]	9999.00 in
MD [Motor Diameter]	6.00 in
SS [Motor Shaft Stickup]	9999.00 in
SD [Motor Shaft Diameter]	9999.00 in

PUMP DATA	
Column Diameter	6 in [152 mm]
Specified Flow	350.00 USgpm
Specified TDH	40.00 ft
Pumping Level	0.50 ft
Motor Manufacturer	OTHER
Driver Type	Submersible
Motor Speed	1700 RPM
Phase / Frequency	3 ph / 60 Hz
Voltage	230/460 V

WEIGHTS	
Total Bowl Weight	194 lbs
Motor Weight	**Refer to Factory**
Total Weight	**Refer to Factory**

NOTES	
1	Total Pump Length ± 1.0 inch.
2	Tolerance on all dimensions is .12 or ± .12 inch per 5 ft, whichever is greater.
3	All dimensions shown are in inches unless otherwise specified.
4	Drawing not to scale.
5	½" NPT – Gauge Conn (plugged)
6	Driver may be rotated at 90° intervals about vertical centerline for details refer to driver dimension drawing.
7	Refer to product IOM for impeller setting requirements.
8	This assembly has been designed so that its natural frequency responses avoid the specific operating speeds by an adequate safety margin. The design has assumed the foundation to be rigid.

DO NOT USE FOR CONSTRUCTION UNLESS CERTIFIED	
Certified By	
Project	Goodlands PS Improvements
Tag	
PO Number	
Serial Number	

3 PUMP DATA

GOULDS WATER TECHNOLOGY
a xylem brand

SUBMITTAL

Quote ID: 9001-250520-017.0:1 QTY: 1
VIS-BATM 9RCLC, 1 Stage
Tencarva Southern Sales Nashville

PERFORMANCE ON DESIGN CURVE AT 1730 RPM

	Shut Off	Design [2]	Run Out [3]
Flow (USGPM)	0.0	350.0	557.0
TDH-Bowl (ft)	52.7	41.0	24.3
TDH-Disch Flange (ft)	52.2	40.3	23.4
Bowl Efficiency (%)	-	81.70	72.10
Power (Hp)	2.8	4.4	4.7
NPSHr (ft) [1]	-	4.9	10.3
NPSH Margin (ft) [1]	-	35.1	29.7
Hydraulic Thrust(lb)	264.0	204.0	121.0
Thrust (lb)	305.2	239.6	148.5
Pressure-Bowl (psi)	22.8	17.7	10.5
Pressure-Disch Flange (psi)	22.6	17.5	10.1
Min Submergence (inch) [3]	-	0.00	0.00
Friction Loss (ft) [4]	-	0.17	0.43
Lineshaft Elongation (inch)	0.00000	0.00000	-
Column Elongation (inch)	0.00000	0.00000	-
Lateral (inch)	0.13000	0.13000	-

Best Efficiency	82.90 % at 412.0 USgpm
Design Flow % BEP	84.95 %
Pump Efficiency	80.64 %
Overall Efficiency	0.00 %
NOL Power	4.9 Hp at 490.0 USgpm
Specified NPSH Ratio	1.1
Thrust Load Power Loss	0.02652 Hp
Total Flow Derate Factor	1.00
Total Head Derate Factor	1.00
Total Efficiency Derate Factor	1.00
Actual Submergence	28.13 in
Shaft Friction Power Loss	0.00 Hp
Min Flow (MCSF)	103.0 USgpm
kWh per 1000 gal	0.00000
Impeller Running Clearance	0.13 in

[1] at 1st impeller eye [2] rated values [3] from pump suction inlet [4] from bowl to disch flange [5] per published data

OPERATING CONDITIONS

Specified Flow	350.00 USgpm
Specified TDH	40.00 ft
Rated Speed	1730 RPM
Atmospheric Pressure	14.70 psi
TPL	836.00 ft
Pumping Level	0.50 ft
NPSHa at 1st Impeller	40.0 ft
NPSHa at Grade	34.0 ft
Well Diameter	12 in [305 mm] Casing
Operational Design	Constant Speed

FLUID CHARACTERISTICS

Fluid	Water
Fluid Temperature	68.0 °F
Specific Gravity	1.0000
Viscosity	1.0017 cP
Vapor Pressure	0.3393 psi
Density	62 lbs/ft³

MATERIALS & DIMENSIONS

Bowl Data

Bowl Material	Cast Iron with Glass Enamel
Impeller Material	316SS
Bowlshaft Material	416SS
Impeller Attachment	Taper Lock
Taperlock Material	Carbon Steel
Discharge Bowl Material	Cast Iron
Suction Type	Subadapter
Bowl Bolting Material	Carbon Steel
Motor Adapter	6 in [152.4 mm]
Motor Adapter Bearing	Bronze
Motor Adapter Material	Ductile Iron
Coupling Material	416SS

Bowl Data

Discharge Bowl Bearing	Bronze
Intermediate Bowl Bearing	Bronze
Impeller Trim	6.88 in
Bowl Pressure Limit	400 psi
Model Max Sphere Size	0.75 in
Available Lateral	0.68 in
Bowl Shaft Diameter	1 3/16 in [30.2 mm]
Impeller Balance	Manufacturer's Standard
Bowl Shaft Power Limit	121.93 Hp
Bowl Assembly Provided By	Xylem

Bowl Specials

Column Data

Column Type	Threaded
Column Diameter	6 in [152 mm]

Column Data

Column Assembly Provided By	Customer

DO NOT USE FOR CONSTRUCTION UNLESS CERTIFIED	
Certified By	
Project	Goodlands PS Improvements
Tag	
PO Number	
Serial Number	

TETRA TECH
www.tetratech.com
10800 CHEVROLET WAY, SUITE 102
ESTERO, FL 33928
PHONE: (239) 390-1467 FAX: (239) 390-1769

Collier County

MARK	DATE	DESCRIPTION	BY

COLLIER COUNTY PUBLIC UTILITIES
GOODLAND PUMP STATION IMPROVEMENTS
PUMP DATA

PROJ: 200-08486-22002
DESN:
DRWN:
CHKD:

D-202

Copyright: Tetra Tech

Bar Measures 1 inch, otherwise drawing not to scale

5/21/2025 6:14:07 PM - O:\PROJECTS\ORLANDO\ER\08486\200-08486-22002\CAD\SHEETFILES\PS IMPROVEMENTS\D-201SECTIONS.DWG - CYR, STEVE

1 CHEMICAL FEED PIPING TUBING TO PIPE TRANSITION

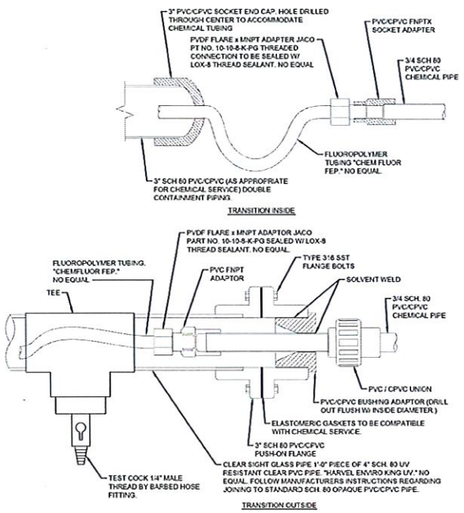

2 CHEMICAL FILL STATION SINK

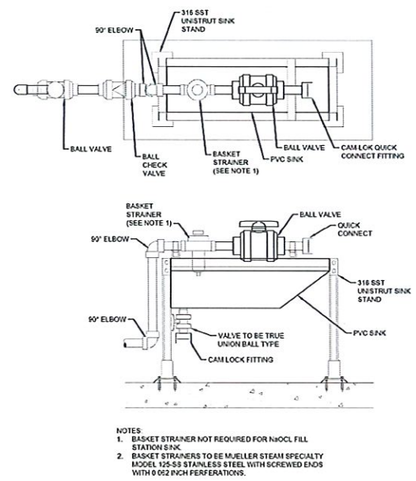

NOTES:
1. BASKET STRAINER NOT REQUIRED FOR NaOCL FILL STATION SINK.
2. BASKET STRAINERS TO EE MUELLER STEAM SPECIALTY MODEL 125-SS STAINLESS STEEL WITH SCREWED ENDS WITH 0.052 INCH PERFERATIONS.

3 WALL MOUNTED CHEMICAL PIPING LEAK DETECTION PORTS

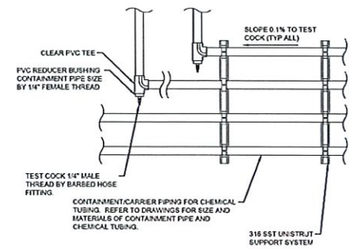

4 CHEMICAL FEED PIPING HANDHOLE

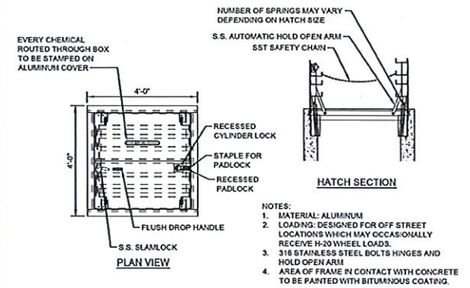

NOTES:
1. MATERIAL: ALUMINUM
2. LOADING: DESIGNED FOR OFF STREET LOCATIONS WHICH MAY OCCASIONALLY RECEIVE H-20 WHEEL LOADS.
3. 316 STAINLESS STEEL BOLTS HINGES AND HOLD OPEN ARM
4. AREA OF FRAME IN CONTACT WITH CONCRETE TO BE PAINTED WITH BITUMINOUS COATING.

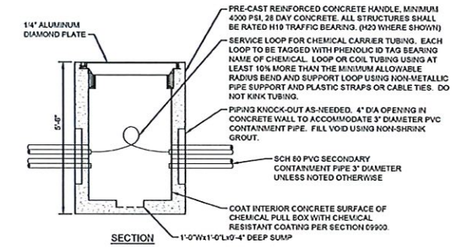

5 EMERGENCY SHOWER AND EYEWASH

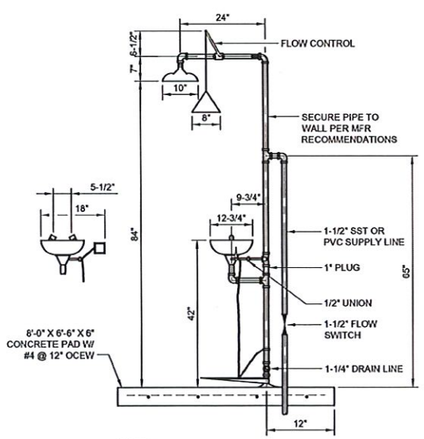

NOTE:
EMERGENCY SHOWER AND EYE WASH SHALL BE BRADLEY MODEL 5193145516 OR HAWS 316 STAINLESS STEEL. (OR EQUAL)

6 PRECAST CONCRETE TRENCH

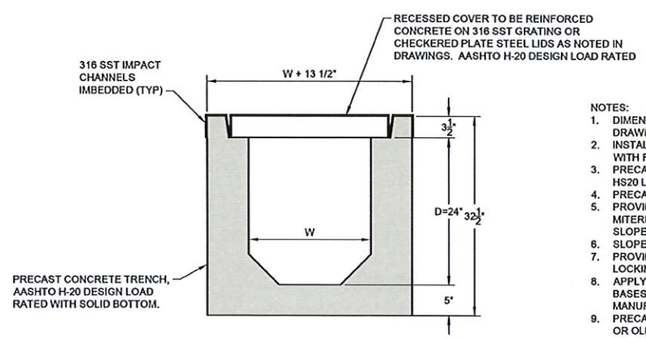

NOTES:
1. DIMENSIONS 'W' AND 'D' TO BE AS NOTED ON THE DRAWINGS.
2. INSTALL TRENCH SO TRENCH COVER IS FLUSH WITH FINISH GRADE.
3. PRECAST TRENCH, COVERS, AND GRATING TO BE HS20 LOAD RATED.
4. PRECAST TRENCH TO HAVE SOLID BOTTOM.
5. PROVIDE END WALLS AT TERMINATION OF TRENCH MITERED BASES AT CHANGES IN DIRECTION OR SLOPE, AND T-SECTIONS AT INTERSECTIONS.
6. SLOPE TRENCH AS NOTES IN DRAWINGS.
7. PROVIDE AND INSTALL BOLTED STEEL TIE PLATES LOCKING ADJACENT TRENCH BASES TOGETHER.
8. APPLY FLEXIBLE CONCRETE SEALANT TO TRENCH BASES AT THE JOINTS USING TRENCH MANUFACTURER'S RECOMMENDED SEALANT.
9. PRECAST TRENCH MANUFACTURER TO BE TRENWA OR OLD CASTLE. INSTALL TRENCH IN ACCORDANCE WITH MANUFACTURER'S RECOMMENDATIONS.

7 CONDENSATE DRYWELL DETAIL

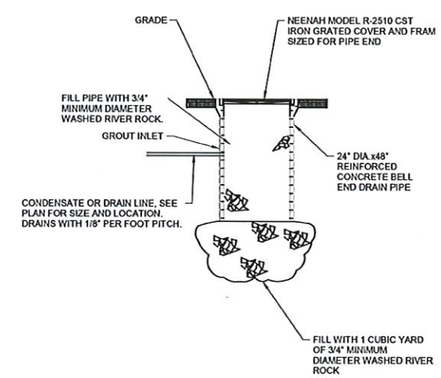

TETRA TECH
www.tetratech.com
10600 CHEVROLET WAY, SUITE 102
ESTERO, FL 33928
PHONE: (239) 390-1467 FAX: (239) 390-1769

Collier County

MARK	DATE	DESCRIPTION	BY

COLLIER COUNTY PUBLIC UTILITIES
GOODLAND PUMP STATION IMPROVEMENTS
PROCESS DETAILS

PROJ: 200-08486-22002
DESN:
DRWN:
CHKD:

D-501

Copyright: Tetra Tech

Bar Measures 1 inch, otherwise drawing not to scale

5/21/2025 6:14:48 PM - O:\PROJECTS\ORLANDO\ER\08486200-08486-22002\CAD\SHEETFILES\PS IMPROVEMENTS\D-501 PROCESS DETAILS.DWG - CYR, STEVE